Illustrated Parts List

MODEL SERIES

80600 81600
80800 81800

●

HOW TO FIND THE CORRECT NUMBER OF THE PART YOU NEED

These instructions are to be followed when using the Parts Lists to determine the correct part for an engine.

A. Refer to Engine Model, Type and Serial Number that is stamped on the blower housing or name plate of engine to be sure that the parts list covers the engine to be repaired.

B. Refer to Illustrated Parts section and compare the old part with illustrations. The number on the illustrations is the Reference Number. Assemblies include all parts shown in frames. All parts shown in assembly frames on which reference numbers are given can be purchased separately.

C. After the Reference Number has been identified, refer to the Numerical Parts List, where Master Part Numbers are listed. THE MASTER PART IS USED ON ALL MODEL OR TYPE NUMBERS EXCEPT THOSE MODEL OR TYPE NUMBERS UNDER "NOTE."

D. If a "Note" appears below the Master Part Number, this means that this part differs from the Master Part for certain model types. If the Model or Type Number of the engine being repaired is listed under "Note," order the part referred to.

E. If the Engine Model or Type Number does not appear after any part number listed under "Note," use the Master Part Number.

An operating manual — Form 27854 — for customer's use is available.

PRINTED IN U. S. A.

ORIGINAL BRIGGS & STRATTON SERVICE PARTS ®

80600, 81600
80800, 81800

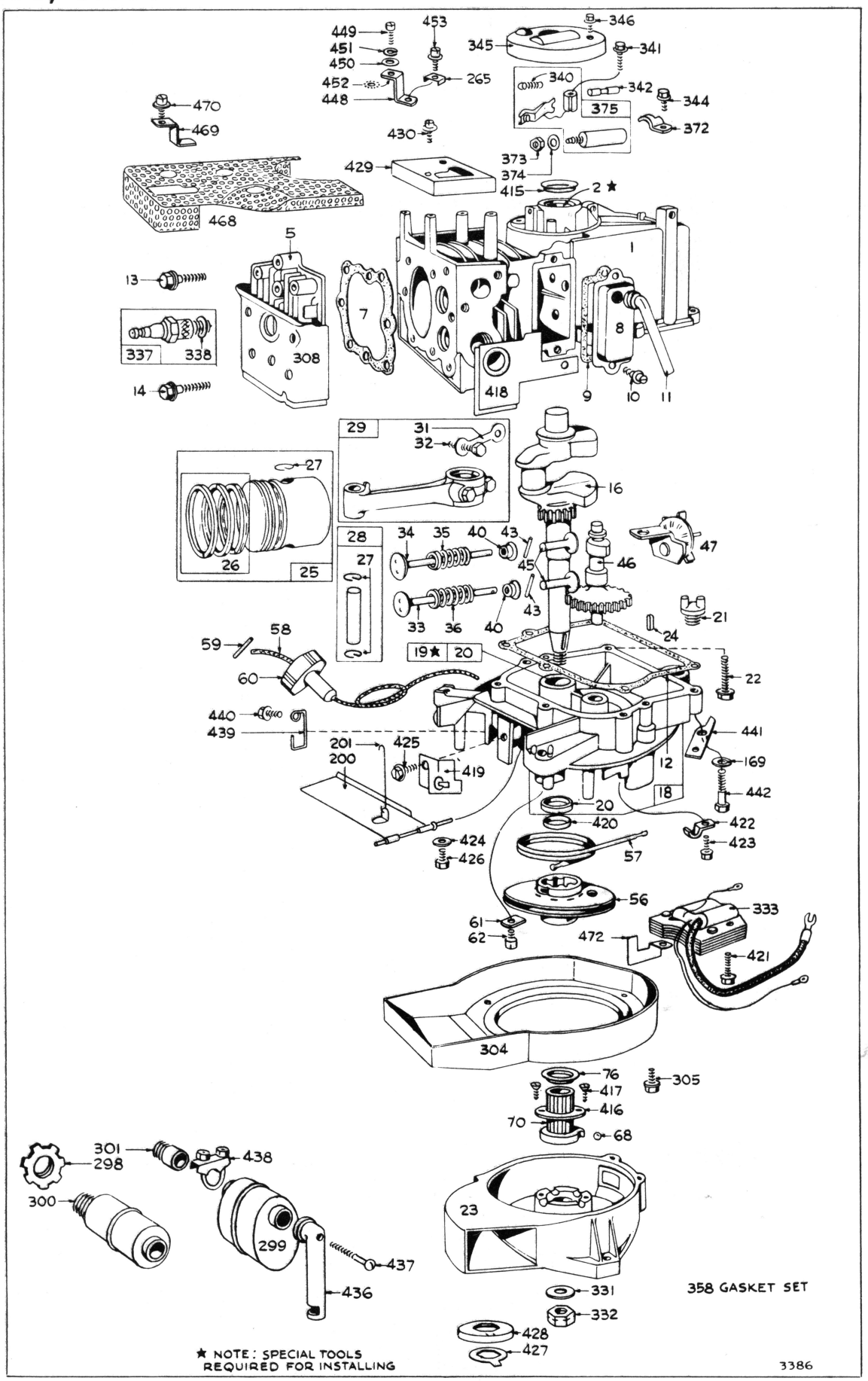

Assemblies include all parts shown in frames.

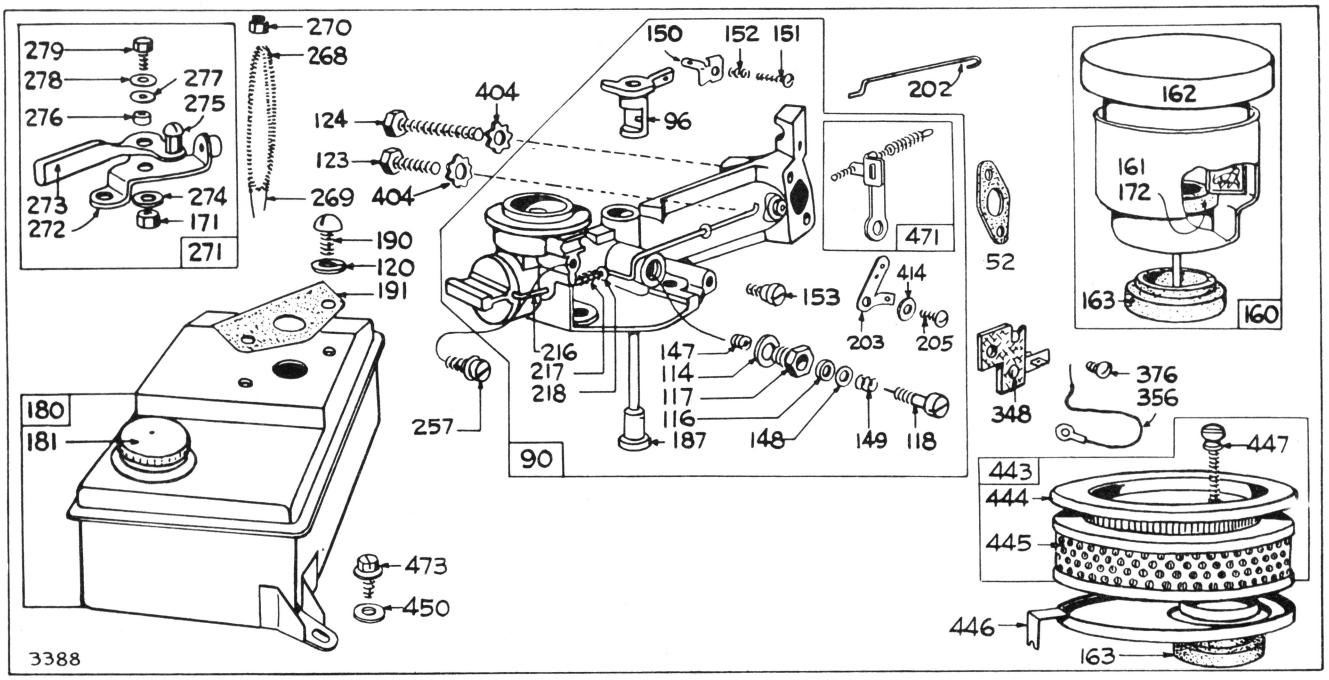

MODEL SERIES 80600 AND 81600 FUEL SYSTEM PARTS

Assemblies include all parts shown in frames.

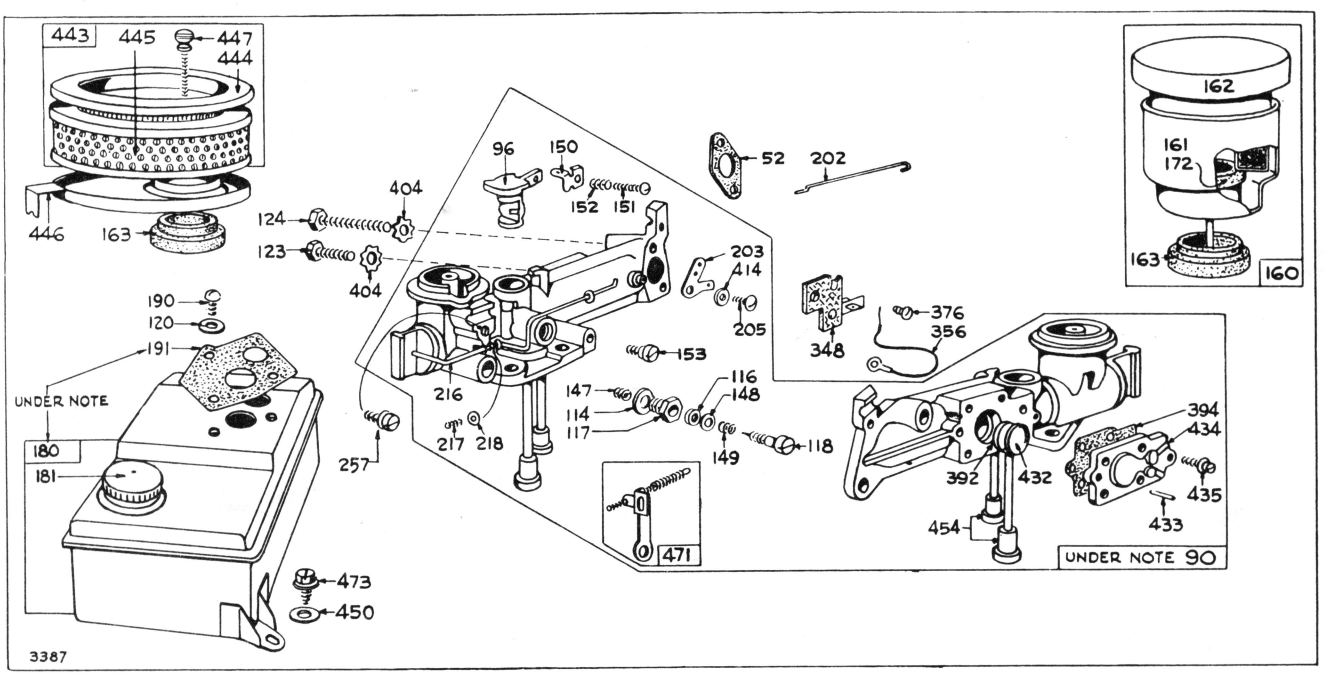

MODEL SERIES 80800 AND 81800 FUEL SYSTEM PARTS

Assemblies include all parts shown in frames.

80600, 81600
80800, 81800

REF. NO.	PART NO.	DESCRIPTION
1	295450	Cylinder Assembly (Used on Model 80600 and 80800 Series)
	Note:	295486 Cylinder Assembly Used on Model 81600 and 81800 Series.
2	220538	Bushing–Cylinder
	Note:	Requires special tools for installation.
5	210475	Head–Cylinder
	Note:	210812 Head–Cylinder Used on Model 80800 and 81800 Series.
7	*27670	Gasket–Cylinder Head
8	292833	Breather–Valve Chamber
9	*27549	Gasket–Valve Cover
10	92870	Screw–Breather Mtg. Sem
11	66638	Tube–Breather
12	*27586	Gasket–Crankcase–.015" thick (Standard)
	*27617	Gasket–Crkcase.–.005" thick
	*27618	Gasket–Crkcase.–.009" thick
13	93111	Screw–Cylinder Head (1-15/16" long)
14	93113	Screw–Cylinder Head (2-5/16" long)
16	260450	Crankshaft
18	296170	Sump–Oil
19	293709	Bushing–Oil Sump
	Note:	Requires special tools for installation.
20	291841	Seal–Oil
21	66768	Plug–Oil Filler
22	93032	Screw–Sump Mtg. Sem
23	296169	Flywheel–Magneto
24	61700	Key–Flywheel
25	295587	Piston Assy.–Standard Used on Model 80600 and 80800 Series.
	Note:	295455 Piston Assy.–Standard Used on Model 81600 and 81800 Series.
	295588	Piston Assy.–.010" O.S. Used on Model 80600 and 80800 Series.
	Note:	295456 Piston Assy.–.010" O.S. Used on Model 81600 and 81800 Series.
	295589	Piston Assy.–.020" O.S. Used on Model 80600 and 80800 Series.
	Note:	295457 Piston Assy.–.020" O.S. Used on Model 81600 and 81800 Series.
	295590	Piston Assy.–.030" O.S. Used on Model 80600 and 80800 Series.
	Note:	295458 Piston Assy.–.030" O.S. Used on Model 81600 and 81800 Series.

MODEL 80600, 80800 SERIES RING SETS:

26	294232	Ring Set–Standard Piston
		210471 Ring, Piston, Comp., Top
		210472 Ring, Piston, Comp., Center
		210473 Ring, Piston, Oil
	294224	Ring Set–.010" O.S. Piston
		210490 Ring, Piston, Comp., Top
		210489 Ring, Piston, Comp., Center
		210491 Ring, Piston, Oil
	294225	Ring Set–.020" O.S. Piston
		210493 Ring, Piston, Comp., Top, .020" O.S.
		210492 Ring, Piston, Comp., Center, .020" O.S.
		210494 Ring, Piston, Oil, .020" O.S.
	294226	Ring Set–.030" O.S. Piston
		210496 Ring, Piston, Comp., Top, .030" O.S.
		210495 Ring, Piston, Comp., Center, .030" O.S.
		210497 Ring, Piston, Oil, .030" O.S.

MODEL 81600, 81800 SERIES RING SETS:

	295657	Ring Set–Standard Piston
		210796 Ring, Piston, Comp., Top, Standard
		210797 Ring, Piston, Comp., Center, Standard
		295661 Ring, Oil (w/expander) Standard
	295658	Ring Set–.010" O.S. Piston
		210799 Ring, Piston, Comp., Top, .010" O.S.
		210798 Ring, Piston, Comp., Center, .010" O.S.
		295662 Ring, Oil (w/expander) .010" O.S.
	295659	Ring Set–.020" O.S. Piston
		210801 Ring, Piston, Comp., Top, .020" O.S.
		210800 Ring, Piston, Comp., Center, .020" O.S.
		295663 Ring, Oil (w/expander) .020" O.S.
	295660	Ring Set–.030" O.S. Piston
		210803 Ring, Piston, Comp., Top, .030" O.S.
		210802 Ring, Piston, Comp., Center, .030" O.S.
		295664 Ring, Oil (w/expander) .030" O.S.
27	26026	Lock–Piston Pin
28	291925	Pin Assy.–Piston–Standard
	291926	Pin Assy.–Piston–.005" O.S.
29	294201	Rod Assy.–Connecting
31	220756	Lock–Connecting Rod Screw
32	92296	Screw–Connecting Rod Screw
33	26973	Valve–Exhaust
34	230563	Valve–Intake
35	26021	Spring–Intake Valve
36	26478	Spring–Exhaust Valve
40	23184	Retainer–Valve Spring
43	23187	Pin–Valve Spring Retainer
45	230173	Tappet–Valve
46	210453	Gear–Cam
47	294652	Oil Slinger Gear and Bracket
52	*27355	Gasket–Carburetor
	Note:	27909 Gasket–Carburetor Mtg. Used on Model 80800 and 81800 Series.
56	295367	Pulley–Rewind Starter
57	294303	Spring–Rewind Starter
58	66384	Rope–Rewind Starter–47-1/8" long
	Note:	If longer rope is needed, order No. 66514 and cut to required length.
59	230228	Pin–Starter Rope
60	66728	Grip–Starter Rope
61	66918	Bumper–Starter Pulley
62	93254	Screw–Pulley Bumper Mtg. Sem
68	63770	Ball–Clutch
70	260392	Ratchet–Rewind Starter
76	67098	Washer–Ratchet Sealing
90	295334	Carburetor Assembly (Choke-A-Matic)
	Note:	296187 Carburetor Assembly (Choke-A-Matic)

* Included in Gasket Set – Part No. 294244

REF. NO.	PART NO.	DESCRIPTION
		Used on Model 80800 and 81800 Series.
96	210721	Throttle–Carb. (Used on Model 80600 and 81600 Series)
	Note:	**210957** Throttle–Carburetor Used on Model 80800 and 81800 Series.
114	65787	Gasket–Needle Valve Nut
	Note:	**66594** Gasket–Needle Valve Nut Used on Model 80800 and 81800 Series.
116	65978	Packing–Needle Valve
117	23431	Nut–Needle Valve
	Note:	**230590** Nut–Needle Valve Used on Model 80800 and 81800 Series.
118	23433	Valve–Needle
120	92290	Washer–Lock– No. 10 x 1/16" x 3/64"
123	90700	Screw–Cap, Hex. Hd.– 1/4-20 x 3/4"
124	93031	Screw–Cap, Hex. Hd.– 1/4-20 x 1-1/2"
147	23432	Seat–Needle Valve
	Note:	**230591** Seat–Needle Valve Used on Model 80800 and 81800 Series.
148	22235	Washer–Needle Valve
149	26336	Spring–Needle Valve
150	220105	Connector–Governor Link
151	92634	Screw–Machine, Rd. Hd.– 5-40 x 5/8"
152	26657	Spring–Throttle Adjustment
153	230030	Screw–Carb. Cam and Lever
160	294870	Cleaner Assembly–Air (with mounting stud)
161	293991	Bowl–Air Cleaner
162	294861	Cover and Filter–Air Cleaner (with mounting stud)
163	*27660	Gasket–Air Cleaner Mounting
169	90832	Washer–Lock– 1/4 x 3/32 x 5/64"
171	92129	Nut–Hex.–1/4-28
172	27795	Gasket–Air Cleaner
180	296418	Tank Assembly–Fuel
	Note:	**296427** Tank Assy.–Fuel Used on Model 80800 and 81800 Series.
181	293270	Cap–Fuel Tank
187	293700	Pipe–Fuel (Used only on Model 80600 and 81600 Series)
190	93259	Screw–Fuel Tank Mounting
191	*27404	Gasket–Fuel Tank Mounting
	Note:	**27911** Gasket–Fuel Tank Mtg. Used on Model 80800 and 81800 Series.
200	295402	Blade–Governor
201	260363	Link–Governor (Bell Crank to Governor Blade)
202	260362	Link–Governor (Bell Crank to Throttle)
203	221050	Crank–Bell
205	92265	Screw–Bell Crank
216	260188	Link–Choke
	Note:	**260449** Link–Choke Used on Model 80800 and 81800 Series.
217	260189	Spring–Choke Link
218	220968	Washer–Choke Link (3)
	Note:	**221198** Washer–Choke Link (3) Used on Model 80800 and 81800 Series.
257	93263	Screw–Fill. Hd., Sem
265	22372	Clamp–Control Wire Casing
268	66986	Casing–Control Wire–48" long
	Note:	If longer casing is needed, specify length in inches; if a shorter casing is needed order No. 66986 and cut to required length.
269	26099	Wire–Control, 54" long
	Note:	If longer wire is needed, specify length in inches; if shorter wire is needed order No. 26099 and cut to required length.
270	63426	Locknut–Control Wire Casing
271	290568	Lever Assembly–Control
272	290584	Base–Control Lever
273	290642	Lever–Control
274	91237	Washer–Lock– 1/4 x 3/32 x 5/64"
275	92287	Screw–Machine, Rd. Hd.– 10-32 x 1/4"
276	22834	Washer–Spacer
277	22368	Washer–Control Lever
278	22725	Washer–Control Lever
279	92306	Screw–Cap, Hex. Hd.– 1/4-28 x 5/8"
298	260367	Locknut–Muffler
299	296148	Muffler–Exhaust (Lo-Tone)
	Note:	**296376** Muffler–Ex. (Lo-Tone) Used on type Nos. 946025, 947025.
300	89966	Muffler–Exhaust
301	230571	Nipple–Muffler
304	220973	Housing–Blower
305	93216	Screw–Blower Hsg. Mtg. Sem
308	220969	Cover–Cylinder Head
331	221074	Washer–Flywheel
332	230534	Nut–Flywheel
333	296171	Armature–Magneto (Includes ignition cable)
337	29693	Plug–Spark (with gasket)
338	29806	Gasket–Spark Plug
340	26018	Spring–Breaker Arm
341	93117	Screw–Contact Finger Post Mounting Sem
342	65704	Plunger–Breaker Point
344	93042	Screw–Cond. Clamp Mtg. Sem
345	220366	Cover–Breaker Point & Cond.
346	93014	Screw–Dust Cover Mtg. Sem
348	296110	Plate Assembly–Stop Switch Insulator
356	296185	Wire–Ground
358	294244	Gasket Set
372	220477	Clamp–Condenser
373	92987	Nut–Condenser Terminal
374	92813	Washer–Lock–Shakeproof
375	294628	Breaker Pts. & Condenser Set
376	93167	Screw–Ground Wire
392	260455	Spring–Fuel Pump Diaphragm
394	27910	Diaphragm
404	93028	Washer–Lock–Shakeproof
414	220982	Washer–Bell Crank
415	221236	Plug–Cylinder
416	220957	Cover–Ratchet
417	93217	Screw–Ratchet Cov. Mtg. Sem
418	221061	Cover–Cylinder Side
419	220962	Anchor–Spring
420	67018	Seal–Crankshaft
421	93215	Screw–Arm. to Sump Mtg. Sem
422	220754	Retainer–Ignition Cable
423	93214	Screw–Ignition Cable Retainer Mounting Sem
424	67072	Washer–Governor Blade Mtg.
425	93216	Screw–Spring Anchor Mtg. Sem
426	93216	Screw–Governor Blade Assy. Mounting Sem
427	221104	Washer–Flywheel Nut
428	221103	Washer–Flywheel Nut Retainer
429	221094	Cover–Cooling
430	93042	Screw–Cooling Cover Mtg. Sem
432	221192	Cap–Spring
433	93265	Pin–Diaphragm Cover
434	210959	Cover–Diaphragm
435	93141	Screw–Diaphragm Cover
436	210945	Elbow–Exhaust Outlet

* Included in Gasket Set – Part No. 294244.

REF. NO.	PART NO.	DESCRIPTION
437	93249	Screw–Self Tapping
438	296045	Clamp–Exhaust Muffler
439	260475	Guide–Rope
440	93014	Screw–Rope Guide Mtg. Sem
441	221228	Support–Fuel Tank
442	93031	Screw–Cap, Hex. Hd. – 1/4-20 x 1-1/2''
443	296271	Cleaner Assembly–Air
444	221182	Cover–Air Cleaner
445	296188	Cartridge–Air Cleaner
446	221181	Support–Air Cleaner

*Included in Gasket Set – Part No. 294244.

REF. NO.	PART NO.	DESCRIPTION
447	93257	Screw–Thumb
448	220965	Bracket–Control Casing
449	91920	Screw–Machine, Fill. Hd. – No. 8-32 x 5/8''
450	67072	Washer–Plain
451	90364	Washer–Lock, No. 8 x 3/64 x 1/32''
452	92029	Washer–Lock, Shakeproof
453	92870	Screw–Casing Clamp Mtg.
454	296178	Housing–Fuel Pipe Screen (for 3/16'' O.D. Pipe)

REF. NO.	PART NO.	DESCRIPTION
	296191	Housing–Fuel Pipe Screen (for 1/8'' O.D. Pipe)
	Note:	These Housings used only on Model 80800, 81800 Series.
468	221253	Screen–Air Intake
469	221256	Clamp–Air Intake Screen
470	92848	Screw–Clamp Mounting Sem
471	296428	High Speed Stop Assembly
472	221285	Scraper–Flywheel
473	93062	Screw–Tank Support Mtg. Sem